30 everel

THE WORLD IN A CLICK

PUSH-BUTTON SWITCHES

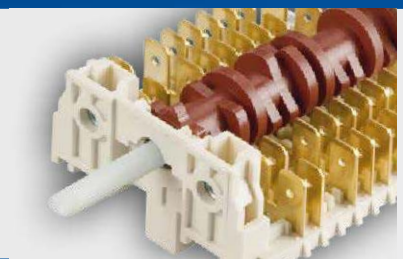

Dreefs SIGNAL LUX gi'em MOLVENO KAUTT & BUX

Push-Button Switches

01

SXL4 72

SCA 74

P1 76

SP60 78

SP63 80

SXL5 82

LITE 84

DY1 86

DY2 88

DY 90
Accessories

SPM 92

TOUCH 94

RFIT 96

SXL4

TYPICAL APPLICATIONS	Coffee machines, washing machines
FUNCTIONS	▪ SPST, momentary or not ▪ SPST, illuminated or not ▪ DPST, momentary or not ▪ DPST, illuminated or not
CYCLE No.	50.000
CUT OUT	19x13 mm
AMBIENT TEMPERATURE	125 ºC
GWT	850 °C
GWT NO FLAME (<2sec)	750 °C

S X L 4 ?

DRAWING

1 FLAT

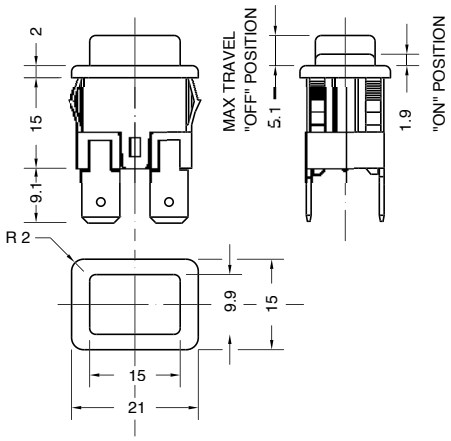

2 BOWL

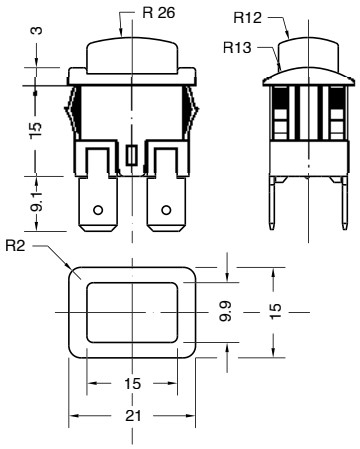

3 CUSTOMIZABLE

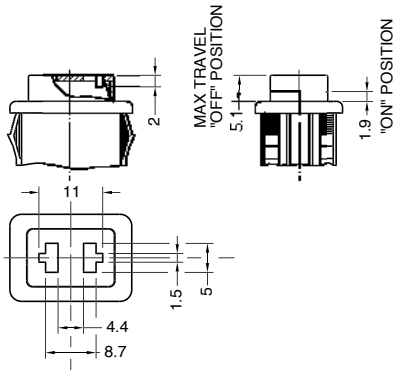

?

TERMINAL

1 Drawing 1 - 2 - 3
Vertical terminal
6.3x0.8

A Drawing 1
Horizontal terminal
6.3x0.8

2 Drawing 1 - 2 - 3
Vertical terminal
4.8x0.8

B Drawing 1 - 3
Horizontal terminal
4.8x0.8

4 Drawing 1 - 2
Vertical PCB terminal

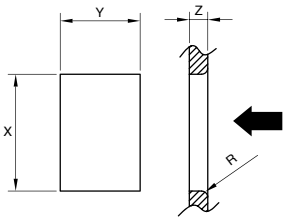

Z	Y		X	
0,5-1,2	12,9	+0,1 / 0	19,0	+0,2 / 0
1,2-2,0	12,9	+0,1 / 0	19,3	+0,2 / 0
2,0-3,0	12,9	+0,1 / 0	19,6	+0,2 / 0

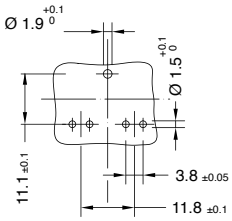

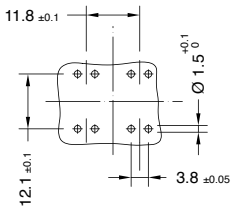

DRAWING	TERMINAL	FUNCTION	RATING	BODY COLOUR	BUTTON COLOUR	MARKING COLOUR	MARKING
S X L 4							0 0 0 W

?	?	?	?	?	? 0 0 0 W
FUNCTION	RATING	BODY COLOUR	BUTTON COLOUR	MARKING COLOUR	MARKING

FUNCTION

1

2

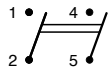

4

6 No drawing 3

7

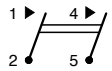

8 No drawing 3

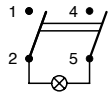

RATING

H

16 (4) A / 250 VAC
10 (6) A / 250 VAC - 5E4
T125/55 °C
EN 61058

16 A - 125 / 250 VAC
3/4 HP - 125 / 250 VAC
T100 °C
UL 1054

9

12 (8) A / 250 VAC - 5E4
T85/55 °C
EN 61058

BODY COLOUR

1 black

2 white

X ? custom

BUTTON COLOUR

Drawing 1 - 3

1 black

2 white

Drawing 1 - 2

M white

N black

R red

ILLUMINATED

G red

H orange

E green

L white

F blue

X ? custom

MARKING COLOUR

0 none

1 black

2 white

X ? custom

MARKING

0

1

R

X ?

SCA

TYPICAL APPLICATIONS	Ironing systems
FUNCTIONS	■ SPST momentary
CYCLE No.	50.000
CUT OUT	19x13 mm
AMBIENT TEMPERATURE	120 ºC
GWT	850 °C
GWT NO FLAME (<2sec)	750 °C on demand

0 5 8 4 **?** **?**

FUNCTION

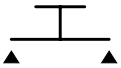

TERMINAL

0

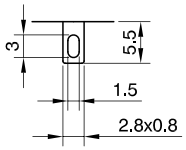

4

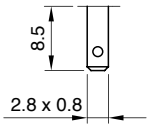

RATING

2

2 (1) A / 250 VAC
1 (0.5) A / 250 VAC - 5E4
T120 °C
EN 61058

2 A - 125 / 250 VAC
T65 °C
UL 1054
CSA C22.2

4

6 (4) A / 250 VAC
5 (2) A / 250 VAC - 5E4
T120 °C
EN 61058

6

10 (4) A / 250 VAC
5 (2) A / 250 VAC - 5E4
T120 °C
EN 61058

6 A - 125 / 250 VAC
1/6 HP - 250 VAC
1/8 HP - 125 VAC
T65 °C
UL 1054
CSA C22.2

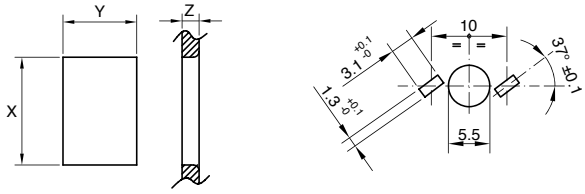

Z	Y		X	
0,70 ... 1,25	13,0	±0,1	19,0	±0,1
1,25 ... 2,0	13,0	±0,1	19,3	±0,2
2,0 ... 3,0	13,0	±0,1	19,6	±0,2

				TERMINAL	RATING	DRAWING	BODY COLOUR	BUTTON COLOUR	MARKING COLOUR	MARKING		
0	5	8	4								0	0

?	?	?	?	?	0	0
DRAWING	**BODY COLOUR**	**BUTTON COLOUR**	**MARKING COLOUR**	**MARKING**		

A Mat

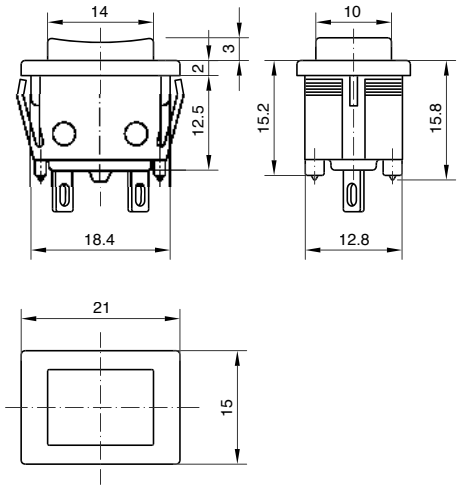

B Gloss

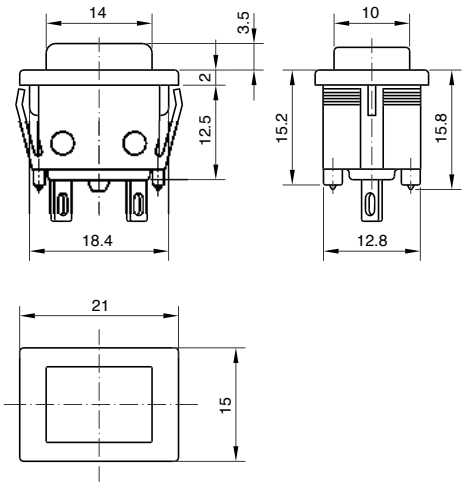

BODY COLOUR

- 1 black
- 2 white
- X custom ?

BUTTON COLOUR

- 1 black
- 2 white
- X custom ?

MARKING COLOUR

- 0 none
- 1 black
- 2 white
- X custom ?

MARKING

- 0
- X ?

P1

TYPICAL APPLICATIONS	Cooking, small appliances, HVAC
FUNCTIONS	▪ SPST momentary, illuminated or not ▪ DPST momentary
CYCLE No.	50.000
CUT OUT	ø 16 mm
AMBIENT TEMPERATURE	125 ºC
GWT	850 °C
GWT NO FLAME (<2sec)	750 °C on demand

P 1 ?

WATERPROOF CAP

DRAWING

2

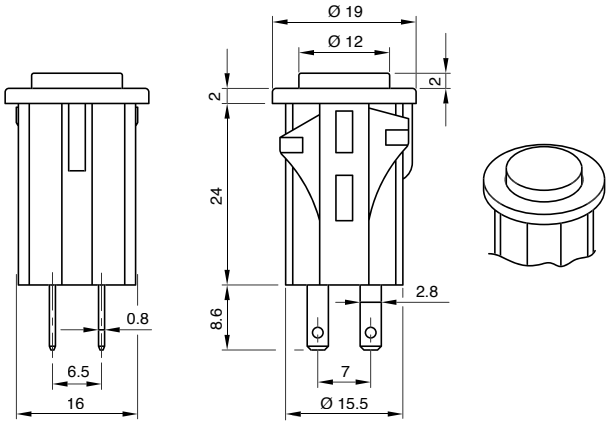

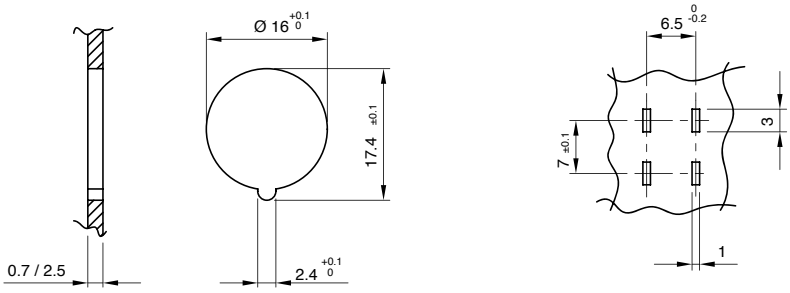

		DRAWING	FUNCTION	RATING	BODY COLOUR	BUTTON COLOUR	MARKING COLOUR	MARKING			
P	1								0	0	0

?	?	?	?	?	?	0	0	0
FUNCTION	RATING	BODY COLOUR	BUTTON COLOUR	MARKING COLOUR	MARKING			

FUNCTION

4

7

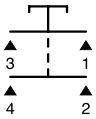

N

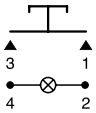

P

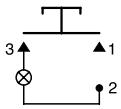

RATING

3

3 (1) A / 250 VAC
0.5 A / 250 VAC - 5E4
T125 °C
EN 61058

On demand
2A/125 VAC
T65 °C
UL 1054

BODY COLOUR

- **1** black
- **2** white
- **X** ? custom

BUTTON COLOUR

- **1** black
- **2** white
- **5** grey
- **9** red

ILLUMINATED

- **G** red
- **X** ? custom

MARKING COLOUR

- **0** none
- **1** black
- **2** white
- **X** ? custom

MARKING

- **0**
- **7**
- **8**
- **X** ?

SP60

TYPICAL APPLICATIONS	Vacuum and steam cleaners
FUNCTIONS	▪ SPST, momentary or not ▪ SPST, illuminated or not ▪ DPST, illuminated or not
CYCLE No.	50.000
CUT OUT	ø 25 mm
AMBIENT TEMPERATURE	120 ºC
GWT	850 °C
GWT NO FLAME (<2sec)	750 °C on demand

S	P	6	0		?
DRAWING					**TERMINAL**

WATERPROOF CAP

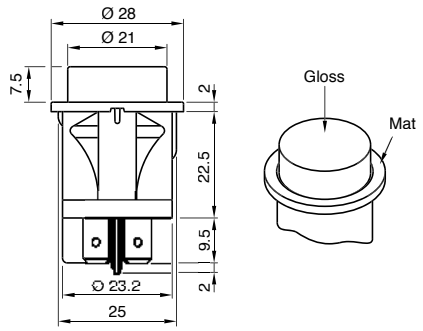

1

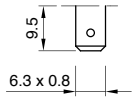

A

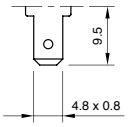

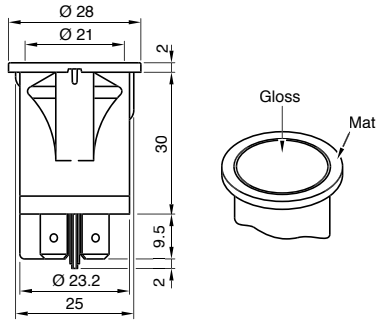

2

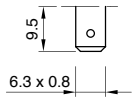

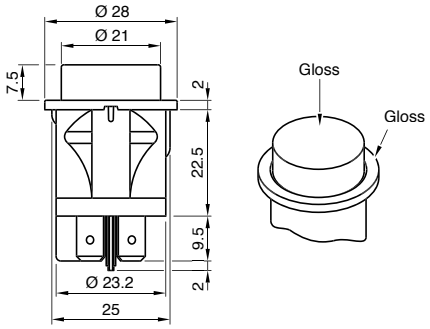

4

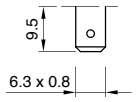

D

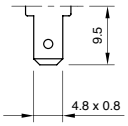

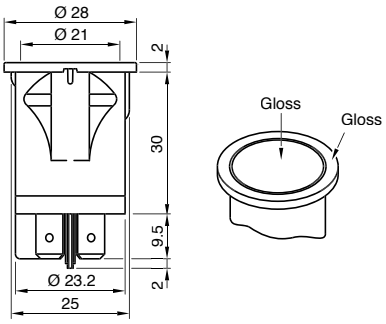

5

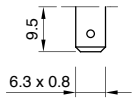

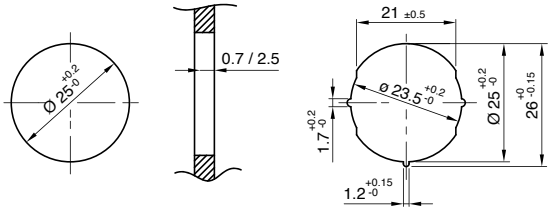

TERMINAL	FUNCTION	RATING	BODY COLOUR	BUTTON COLOUR	MARKING COLOUR	MARKING		
S P 6 0							0	0

?	?	?	?	?	?	0	0
FUNCTION	RATING	BODY COLOUR	BUTTON COLOUR	MARKING COLOUR	MARKING		

FUNCTION

1

2

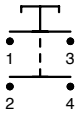

4

6

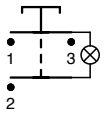

8

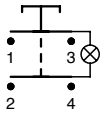

RATING

7

16 (6) A / 250 VAC
10 (4) 250 VAC - 5E4
10 (4) A / 400 VAC
T120/55 °C
EN 61058

16 A - 125 / 250 VAC
1/4 HP / 125 VAC
1/2 HP / 250 VAC
T95 °C
UL 1054

C

16 (6) A / 250 VAC
10 (4) 250 VAC - 5E4
10 (4) A / 400 VAC
T120/55 °C
EN 61058

BODY COLOUR

1 black

2 white

X custom ?

BUTTON COLOUR

M white

N black

R red

ILLUMINATED

G red

H orange

E green

L white

X custom ?

No lens

0

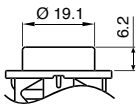

MARKING COLOUR

0 none

1 black

2 white

X custom ?

MARKING

0

7

D

E

K

X

ACCESSORIES

SP60T1N0000

SP60T1M0000

SP60T1G0000

SP60T1E0000

Other colours available on demand.

SP63

TYPICAL APPLICATIONS	Vacuum and steam cleaners
FUNCTIONS	▪ SPST, momentary or not ▪ SPST, illuminated or not ▪ DPST illuminated
CYCLE No.	50.000
CUT OUT	27x22 mm
AMBIENT TEMPERATURE	120 ºC
GWT	850 °C
GWT NO FLAME (<2sec)	750 °C on demand

S P 6 3

DRAWING

?

TERMINAL

1

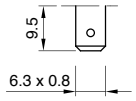

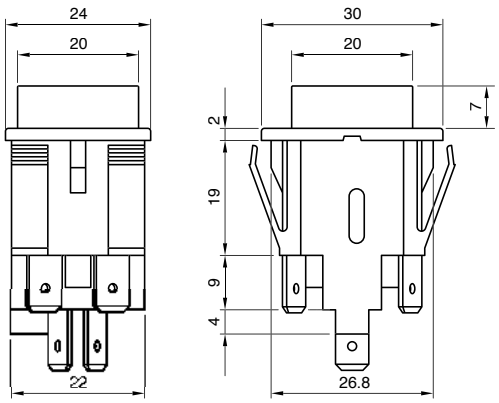

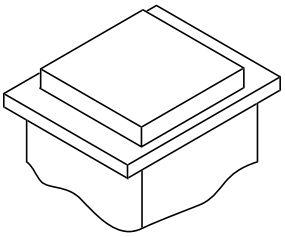

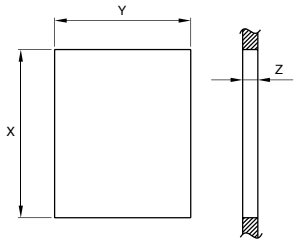

Z	Y		X	
0,7 ... 2,5	22,2	+0,3 / 0	27,2	+0,3 / 0

S	P	6	3	TERMINAL	FUNCTION	RATING	BODY COLOUR	BUTTON COLOUR	MARKING COLOUR	MARKING	0	0
					?	?	?	?	?	?	0	0

FUNCTION

4

6

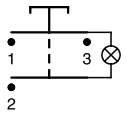

8

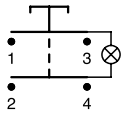

N

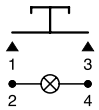

RATING

C

16 (6) A / 250 VAC
10 (4) A / 250 VAC - 5E4
10 (4) A / 400 VAC
T120 °C
EN 61058

BODY COLOUR

1 black

X ? custom

BUTTON COLOUR

M white

N black

R red

ILLUMINATED

G red

H orange

E green

L white

X ? custom

No lens

0

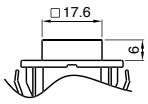

MARKING COLOUR

0 none

1 black

2 white

X ? custom

MARKING

0

4

7

X ?

ACCESSORIES

SP63T1E0000

SP63T1G0000

SP63T1H0000

Other colours available on demand.

SXL5

TYPICAL APPLICATIONS	Vacuum cleaners, washing machines, dishwashers, hydrocleaners
FUNCTIONS	▪ SPST, momentary or not ▪ DPST, momentary or not
CYCLE No.	50.000
CUT OUT	Rear panel
AMBIENT TEMPERATURE	125 ºC
GWT	850 °C
GWT NO FLAME (<2sec)	750 °C

S X L 5 ?

TRAVEL POSITION

OFF position

Max travel

5,1 ±0,2

ON position

3,2 $^{0}_{-0,2}$

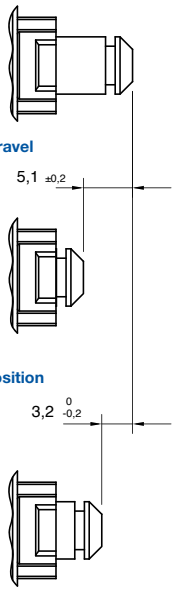

DRAWING

1

Vertical tab terminals

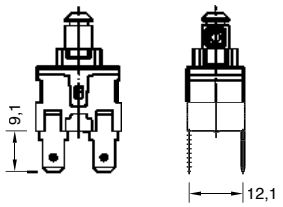

Vertical PCB terminals

Single pole version

Double pole version

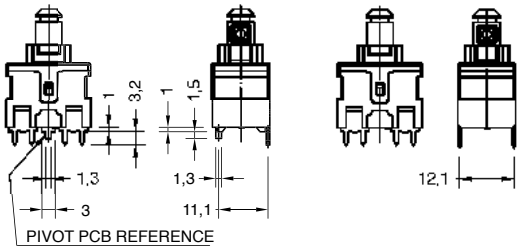

Horizontal tab terminals

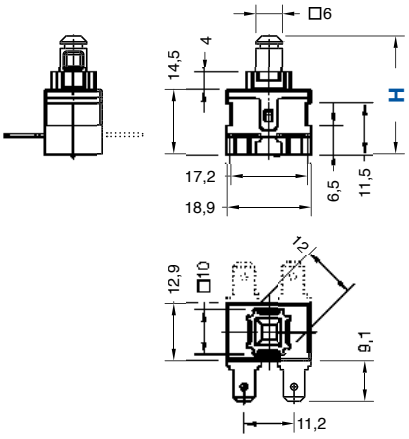

Horizontal PCB terminals

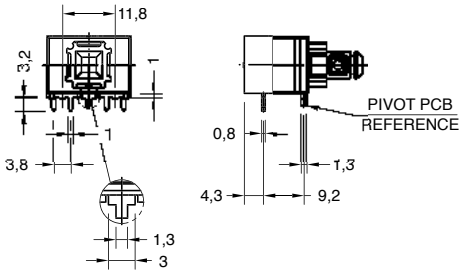

2

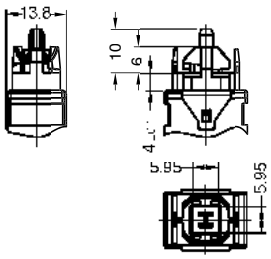

Wings fixing

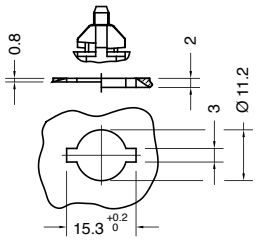

3

Single pole version

Double pole version

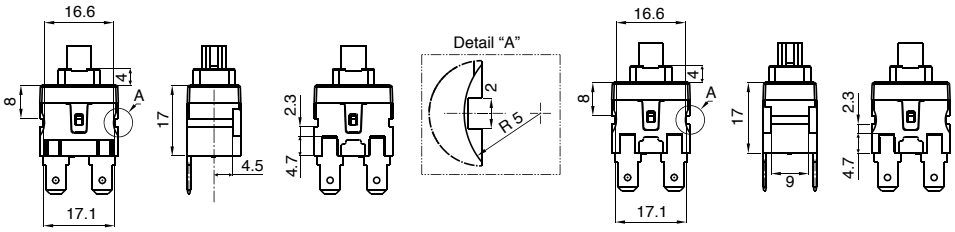

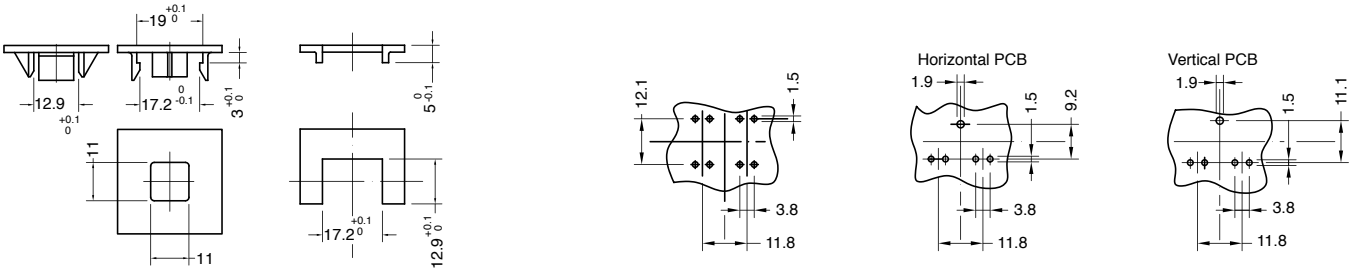

DRAWING	TERMINAL	SHAFT	FUNCTION	RATING
S X L 5				0 0 0 W

TERMINAL

1 Drawing 1 - 2 - 3
Vertical terminal
6.3x0.8

A Drawing 1 - 3
Horizontal terminal
6.3x0.8

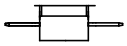

2 Drawing 1 - 2 - 3
Vertical terminal
4.8x0.8

B Drawing 1 - 3
Horizontal terminal
4.8x0.8

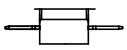

4 Drawing 1 - 2
Vertical PCB terminal

D Drawing 1
Horizontal PCB
terminal
only function 1 - 4

SHAFT

A H = 26.5
Available with drawings 1 and 2

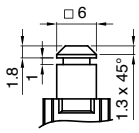

B H = 28.5

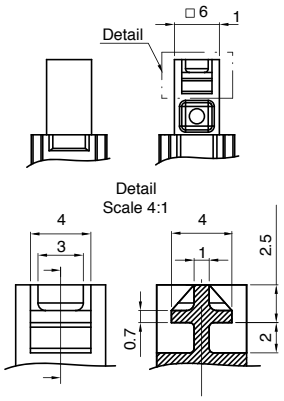

C H = 24
Available with drawings 1 and 2

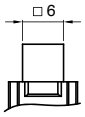

D H = 28.5

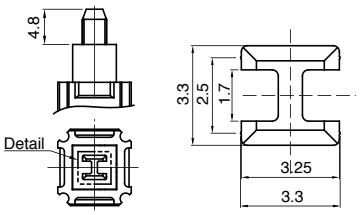

E H = 26.5

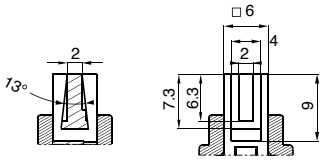

FUNCTION

1

2

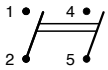

4

7

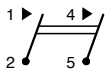

RATING

H

12 (8) A / 250 VAC
16 (4) A / 250 VAC
10 (6) A / 250 VAC - 5E4
T125/55 °C
EN 61058 / CQC

16 A - 125 / 250 VAC
3/4 HP - 125 / 250 VAC
T100 °C
UL 1054

9

12 (8) A / 250 VAC - 5E4
T85/55 °C
EN 61058

16 A - 125 / 250 VAC
3/4 HP - 125 / 250 VAC
T100 °C
UL 1054

LITE

TYPICAL APPLICATIONS	Coffee machines
FUNCTIONS	■ SPST, illuminated or not ■ DPST illuminated
CYCLE No.	50.000
CUT OUT	19x13 mm rear panel
AMBIENT TEMPERATURE	125 ºC
GWT	850 °C
GWT NO FLAME (<2sec)	750 °C

L I T E ?

DRAWING

1

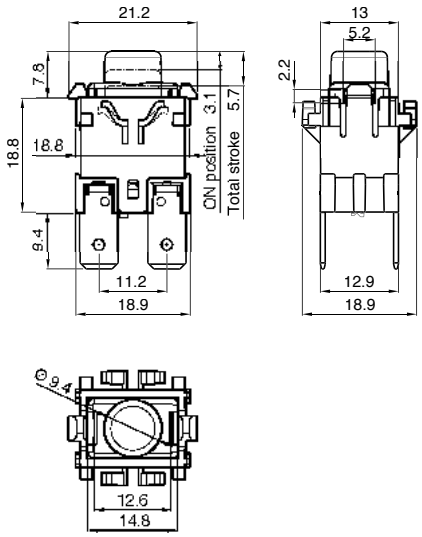

?

TERMINAL

1 Vertical terminal
6.3x0.8

2 Vertical terminal
4.8x0.8

A Horizontal terminal
6.3x0.8

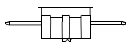

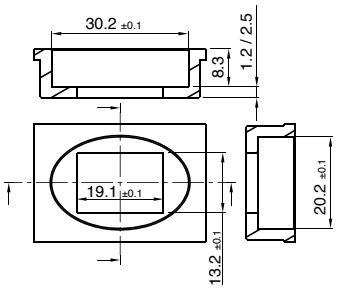

DRAWING	TERMINAL	AESTHETIC	FUNCTION	RATING	LENS COLOUR	LAMP COLOUR			
L I T E							0	0	0

?	?	?	?	?	0 0 0
AESTHETIC	**FUNCTION**	**RATING**	**LENS COLOUR**	**LAMP COLOUR**	

A

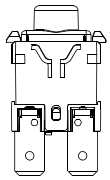

1

5

8

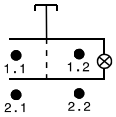

C

16 (6) A / 250 VAC
12 (10) A / 250 VAC
8 (8) A / 250 VAC - 5E4
T125/55 °C
EN 61058

16 A - 125 / 250 VAC
1/2 HP - 125 VAC
3/4 HP - 250 VAC
T100 °C
UL 1054

L colourless

0 no lamp

G red

E green

ACCESSORIES

LITET1N0000

LITET1M0000

LITET1E0000

LITET1G0000

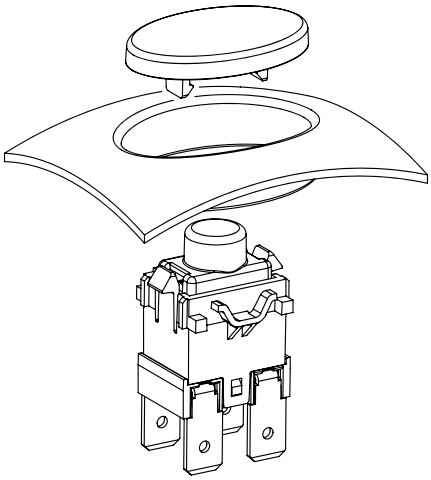

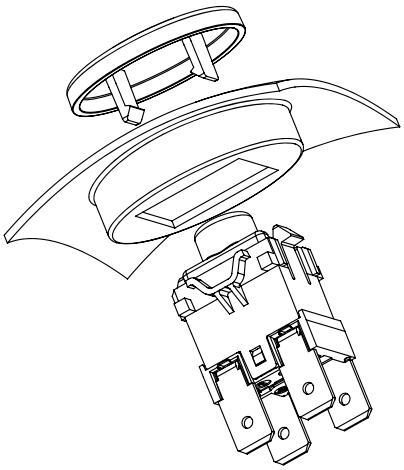

DY1

TYPICAL APPLICATIONS	Cooking, washing, coffee machines
FUNCTIONS	■ SPST, momentary or not ■ SPDT, momentary or not
CYCLE No.	50.000
CUT OUT	Rear panel
AMBIENT TEMPERATURE	125 ºC
GWT	850 °C
GWT NO FLAME (<2sec)	750 °C

D Y 1

DRAWING

?

TERMINAL

1

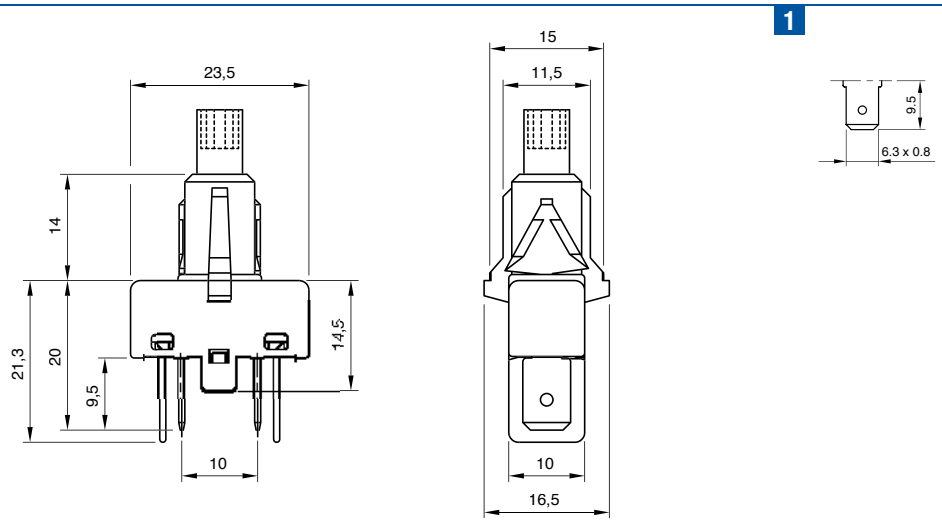

6

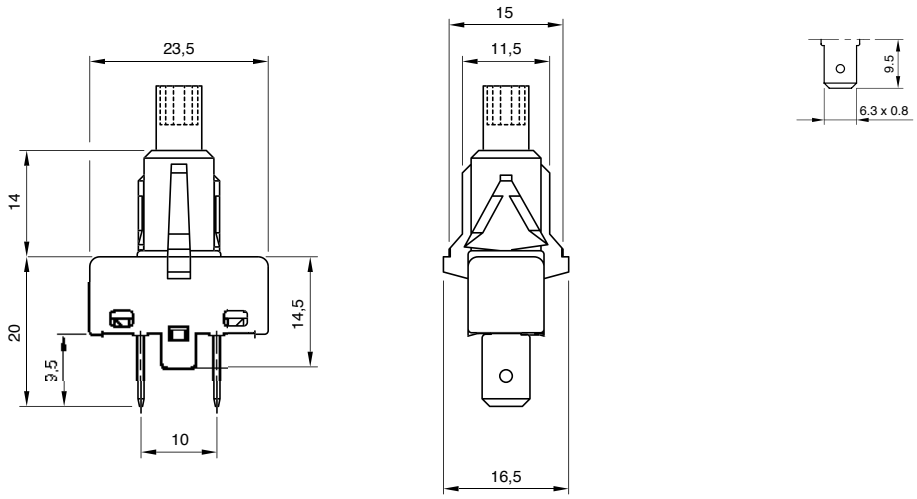

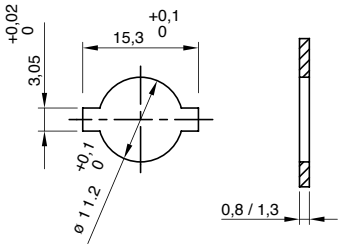

D	Y	1	TERMINAL	SHAFT	LATCHING FUNCTION	FUNCTION		RATING	0	0	0

?	?	?	?	?	0	0	0

SHAFT

E

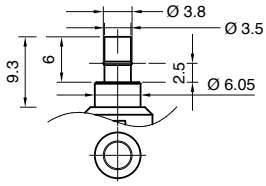

G

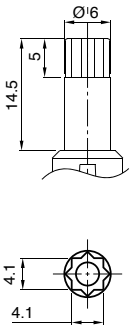

K

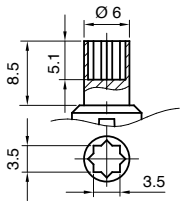

LATCHING FUNCTION

S Push to On - Push to Off

M Momentary

FUNCTION

10

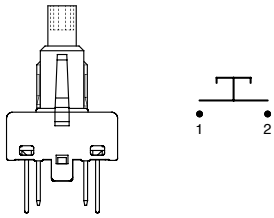

60

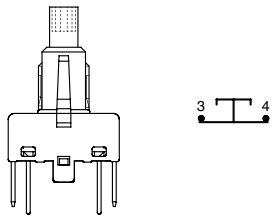

30

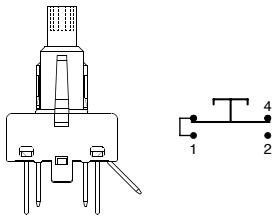

RATING

E

Function 10

16 (6) A / 250 VAC
10 (4) A / 250 VAC - 5E4
T125/55 °C
6 (2) A / 250 VAC
T150/55 °C
EN 61058

13 A / 250 VAC
3/4 HP - 250 VAC
1/3 HP - 125 VAC
T65 °C
UL 1054

Function 60

16 (6) A / 250 VAC
10 (4) A / 250 VAC - 5E4
T125/55 °C
EN 61058

13 A / 250 VAC
3/4 HP - 250 VAC
1/3 HP - 125 VAC
T65 °C
UL 1054

N

Function 30

12 (4) A / 250 VAC
10 (4) A / 250 VAC - 5E4
T125/55 °C
µ disconnection
EN 61058

13 A / 250 VAC
3/4 HP - 250 VAC
1/3 HP - 125 VAC
T65 °C
UL 1054

DY2

TYPICAL APPLICATIONS	Cooking, washing, coffee machines
FUNCTIONS	■ DPST, momentary or not ■ SPST+SPDT, momentary or not
CYCLE No.	50.000
CUT OUT	Rear panel
AMBIENT TEMPERATURE	125 ºC
GWT	850 °C
GWT NO FLAME (<2sec)	750 °C

D Y 2

DRAWING

?

TERMINAL

1

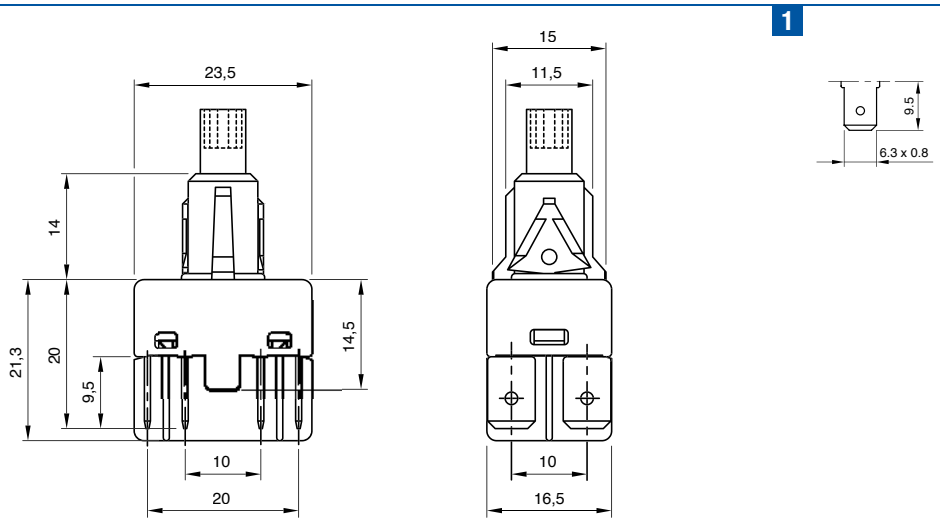

6

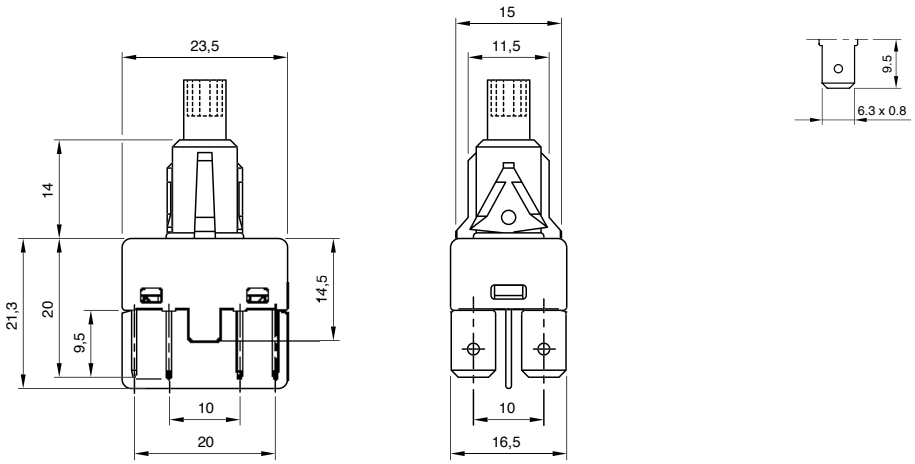

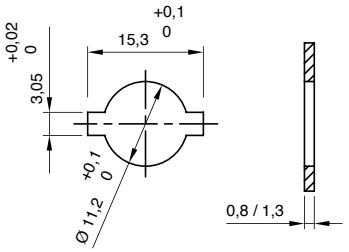

			TERMINAL	SHAFT	LATCHING FUNCTION	FUNCTION		RATING			
D	Y	2							0	0	0

?		?		?	?		?		0	0	0

SHAFT

E

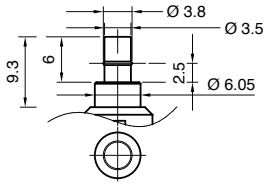

K

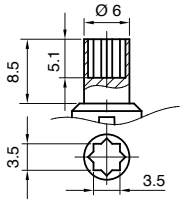

LATCHING FUNCTION

S Push to On - Push to Off

M Momentary

FUNCTION

11

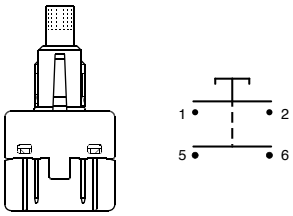

13

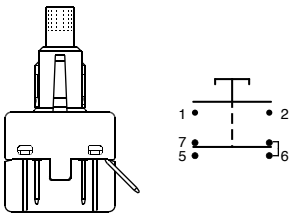

RATING

E

Function 11

16 (6) A / 250 VAC
10 (4) A / 250 VAC - 5E4
T125/55 °C
EN 61058

13 A / 250 VAC
3/4 HP - 250 VAC
1/3 HP - 125 VAC
T65 °C
UL 1054

P

Function 13

- Side switch (1-2)
16 (6) A / 250 VAC
10 (4) A / 250 VAC - 5E4
T125/55 °C
EN 61058

- Side changeover (5-6-7)
12 (4) A / 250 VAC
10 (4) A / 250 VAC - 5E4
T125/55 °C
µ disconnection
EN 61058

13 A / 250 VAC
T65 °C
UL 1054

DYST

Accessories for DY series

TYPICAL APPLICATIONS	Cooking, washing, coffee machines
CUT OUT	See drawing
AMBIENT TEMPERATURE	up to 125 °C
GWT	850 °C

D	Y	S	T	TYPE	BODY COLOUR	0	0	0	0

D	Y	S	T		?	?	0	0	0	0
CUT OUT				**DRAWING**	**TYPE**	**BODY COLOUR**				

Oval body

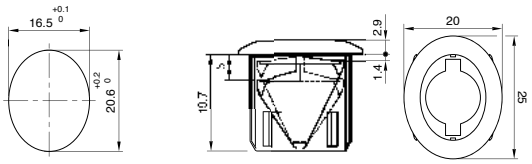

5 Standard

7 Painted

Round body with antirotation rib

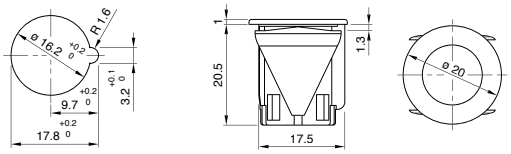

1 Standard

9 Painted

Round body

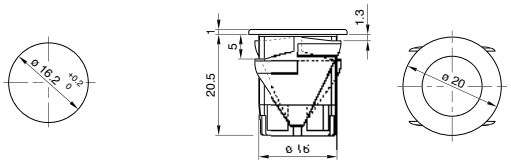

3 Standard

8 Painted

Soft Round body with antirotation rib

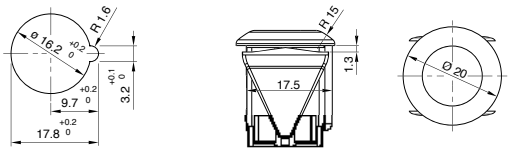

G Standard

S Painted

Soft Round body

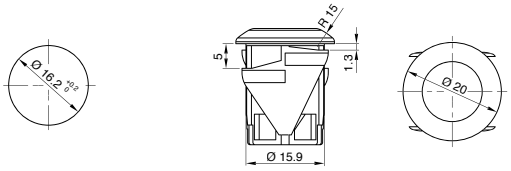

L Standard

T Painted

Standard

1 black

2 white

Painted

1 chrome

X ? custom

DYT

Accessories for DY series

TYPICAL APPLICATIONS	Cooking, washing, coffee machines
CUT OUT	See drawing
AMBIENT TEMPERATURE	55 °C
GWT	850 °C

D	Y	T	TYPE	BUTTON COLOUR	MARKING COLOUR	MARKING	0	0

D	Y	T	?	?	?	?	?	0	0
DRAWING			TYPE		BUTTON COLOUR	MARKING COLOUR	MARKING		

Oval button

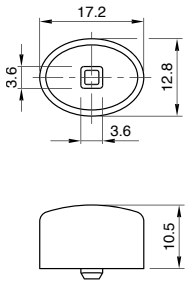

5K Standard

7K Painted

Round button

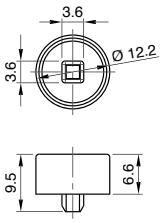

1K Standard

8K Painted

Soft Round button

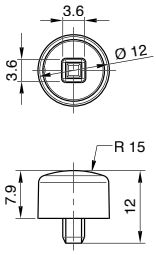

3K Standard

9K Painted

Standard

- **1** black
- **2** white

Painted

- **1** chrome

- **X** custom

- **0** none
- **1** black
- **2** white
- **X** custom

- **0**
- **X** ?

SPM

TYPICAL APPLICATIONS	Washing
FUNCTIONS	■ SPST, momentary or not ■ SPDT ■ DPST, momentary or not ■ DPDT
CYCLE No.	50.000
CUT OUT	Rear panel
AMBIENT TEMPERATURE	125 ºC
GWT	850 °C
GWT NO FLAME (<2sec)	750 °C (Rating C)

S P M

DRAWING

?

TERMINAL

4

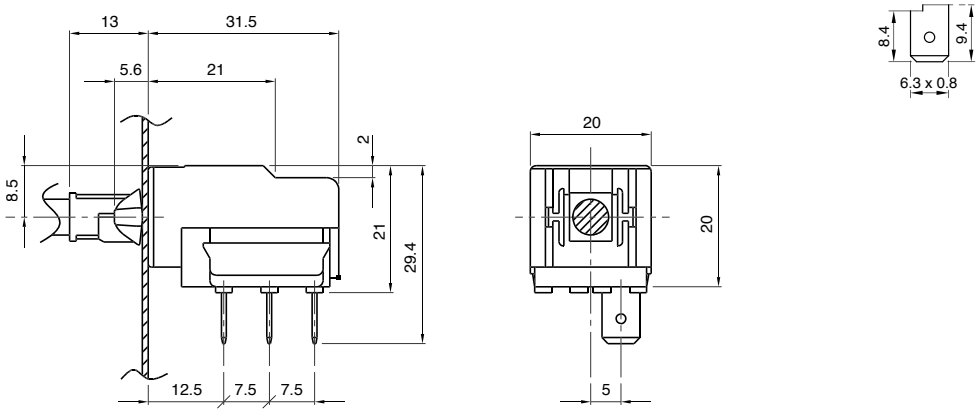

1

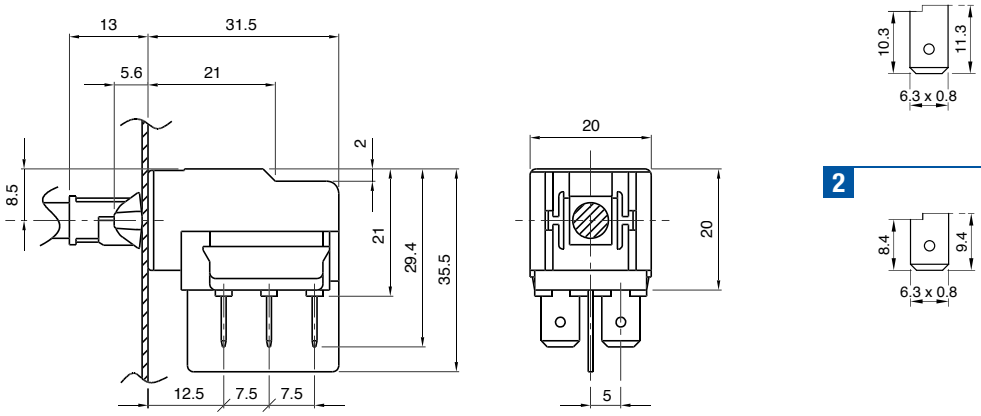

2

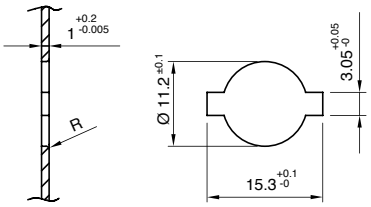

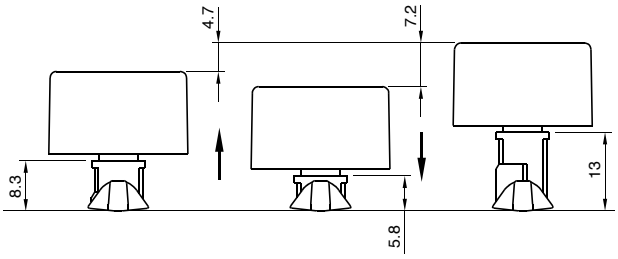

TERMINAL	SHAFT	FUNCTION	RATING					
S	P	M					0	0	0

? SHAFT

C

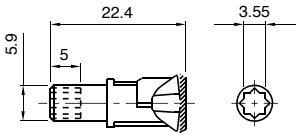

E

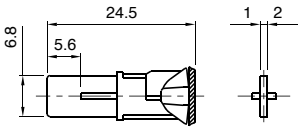

M

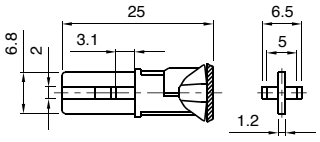

P

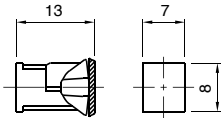

? FUNCTION

1

2

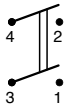

3

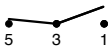

4

7

C

K

L

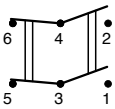

? RATING

4

16 (8) A / 250 VAC
10 (6) A / 250 VAC - 5E4
10 A / 400 VAC
T125 °C
EN 61058

C

16 (8) A / 250 VAC
10 (6) A / 250 VAC - 5E4
10 A / 400 VAC
T125 °C
EN 61058

20 A / 125 VAC
16 A / 250 VAC
1/3 HP - 125 VAC
3/4 HP - 250 VAC
T65 °C
UL 1054
CSA C22.2

0 0 0

TOUCH

TYPICAL APPLICATIONS	Cooker hoods, coffee machines, microwave
FUNCTIONS	▪ SPST, momentary or not ▪ SPDT, momentary or not ▪ DPST, momentary or not ▪ DPDT, momentary or not
CYCLE No.	10.000
CUT OUT	-
AMBIENT TEMPERATURE	110 °C
GWT	850 °C
GWT NO FLAME (<2sec)	750 °C

T O U C H

?

TERMINAL

4

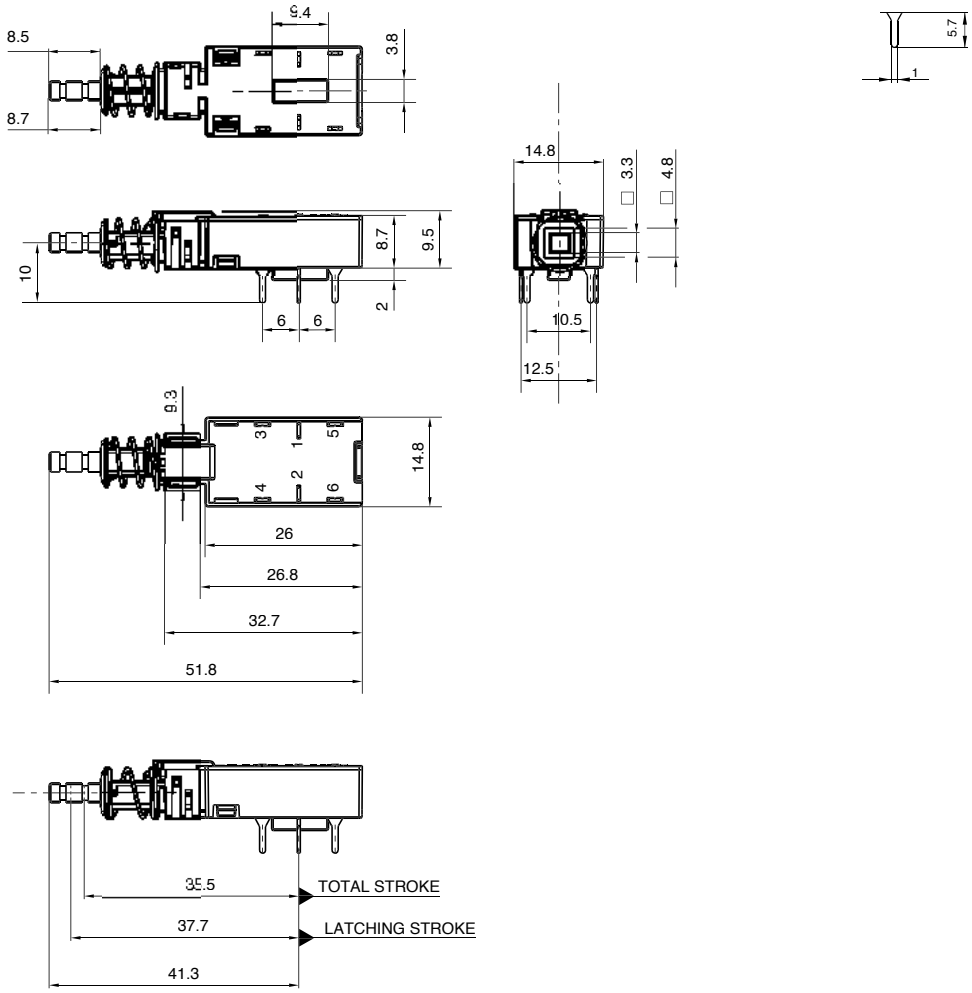

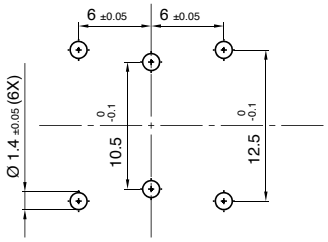

TERMINAL	SHAFT	FUNCTION	RATING
T O U C H			0 0 W

0 0 W

?

SHAFT

A

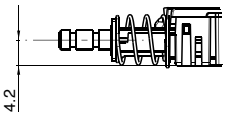

B

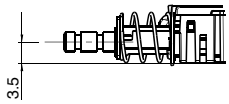

?

FUNCTION

1

2

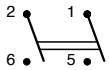

3

4

7

B

L

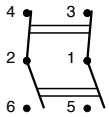

M

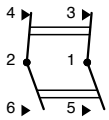

?

RATING

2

5 (2) A / 250 VAC
T85 °C
EN 61058

6 A / 125 VAC
T65 °C
UL 1054

3

8 (3) A / 250 VAC
T110 °C
EN 61058

6 A / 125 VAC
T65 °C
UL 1054

RFIT

TYPICAL APPLICATIONS	Coffee machines, washing machine
FUNCTIONS	▪ SPST, momentary or not ▪ DPST, momentary or not ▪ DPST, illuminated or not
CYCLE No.	50.000
CUT OUT	ø 20 mm
AMBIENT TEMPERATURE	125 ºC
GWT	850 °C
GWT NO FLAME (<2sec)	750 °C on demand

R F I T ?

?

DRAWING

1

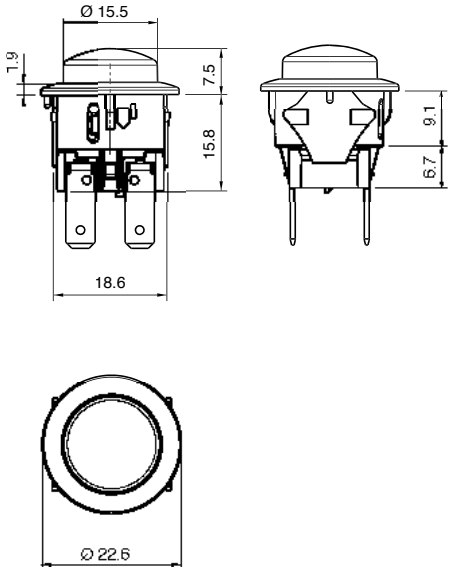

TERMINAL

2

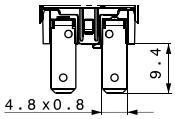

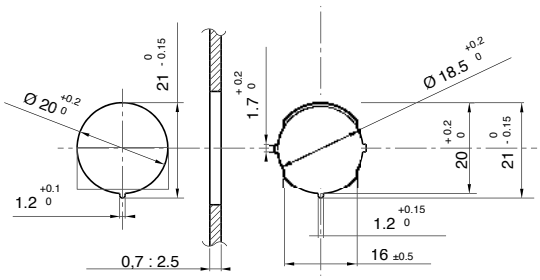

DRAWING	TERMINAL	FUNCTION	RATING	BODY COLOUR	BUTTON COLOUR					
R F I T						0	0	0	0	0

?	?	?	?	0 0 0 0 0
FUNCTION	RATING	BODY COLOUR	BUTTON COLOUR	

FUNCTION

1

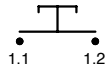

2

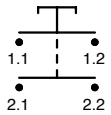

4

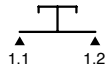

7

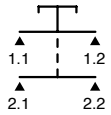

8

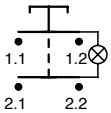

RATING

C

16 (6) A / 250 VAC
12 (10) A / 250 VAC
8 (8) A / 250 VAC - 5E4
T125 / 55 °C
EN 61058

16 A - 125 / 250 VAC
1 / 2 HP - 125 VAC
3 / 4 HP - 250 VAC
T65 °C (T100 °C on demand)
UL 1054

BODY COLOUR

1 black

2 white

BUTTON COLOUR

N black

M white

ILLUMINATED

E green

F blue

G red

H orange

X custom ?

www.imprinaturadv.it

30 everel
THE WORLD IN A CLICK

Everel Group S.P.A.
[Headquarter - Production Site]
Via Cavour, 9
37067 Valeggio sul Mincio (VR) - Italy
tel. +39 045 6313711
fax +39 045 6313730

Dreefs GmbH
[Production Site]
Ernst-Dreefs-Straße 7
96364 Marktrodach - Germany
tel. +49 9261 9610
fax +49 9261 961248

Everel Romania S.r.l.
[Production Site]
Calea Timisorii 109
Lipova - Arad - Romania
tel. +40 257 563087
fax +40 257 563086

www.everelgroup.com

Ed. 2017